STRAIGHT GRAIN
5294 Raglan blouse with lace gusset
BACK_SLEEVE
Fabric type TOP_FABRIC, Piece qty =(1,1)
LEKO CAD

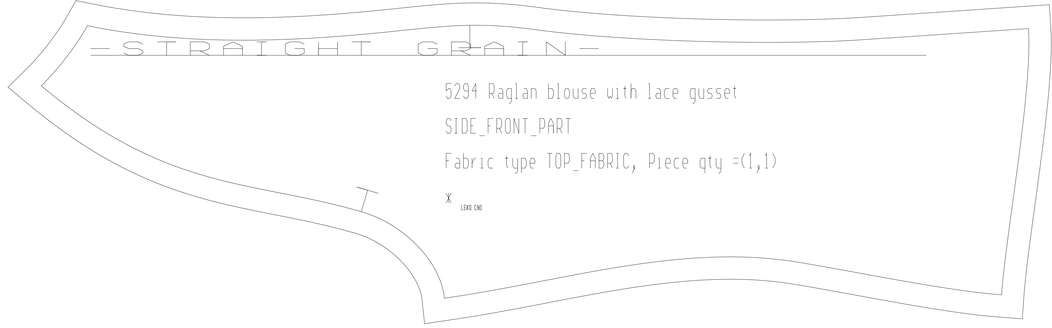
STRAIGHT GRAIN
5294 Raglan blouse with lace gusset
SIDE_FRONT_PART
Fabric type TOP_FABRIC, Piece qty =(1,1)
LEKO CAD

STRAIGHT GRAIN
5294 Raglan blouse with lace gusset
FRONT_SLEEVE
Fabric type TOP_FABRIC, Piece qty =(1,1)

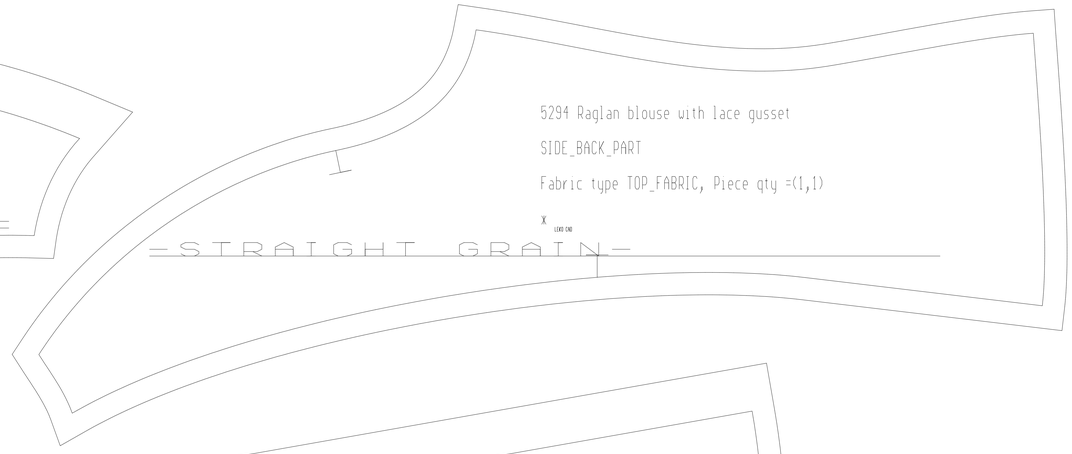
5294 Raglan blouse with lace gusset
SIDE_BACK_PART
Fabric type TOP_FABRIC, Piece qty =(1,1)
LEKO CAD
STRAIGHT GRAIN

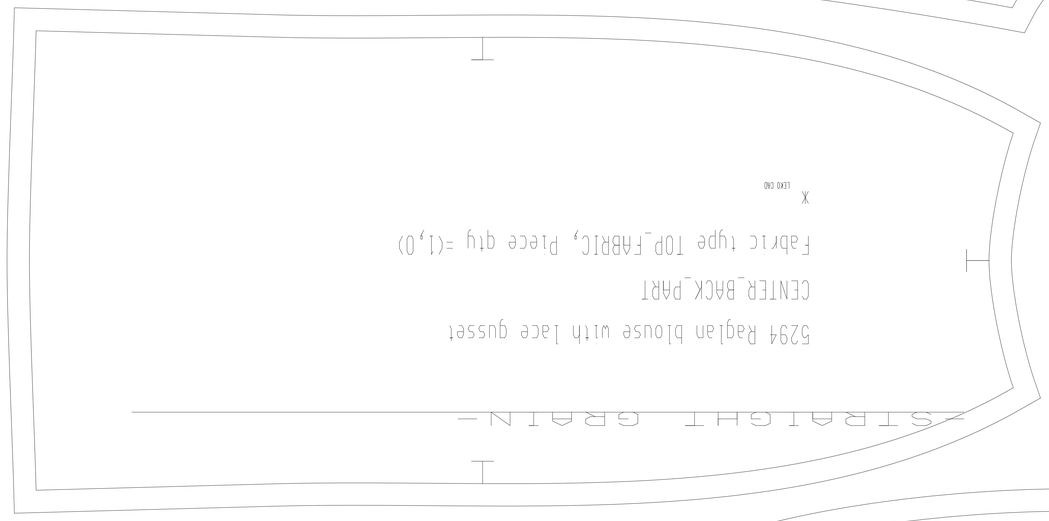
STRAIGHT GRAIN
5294 Raglan blouse with lace gusset
CENTER_BACK_PART
Fabric type TOP_FABRIC, Piece qty =(1,0)
LEKO CAD

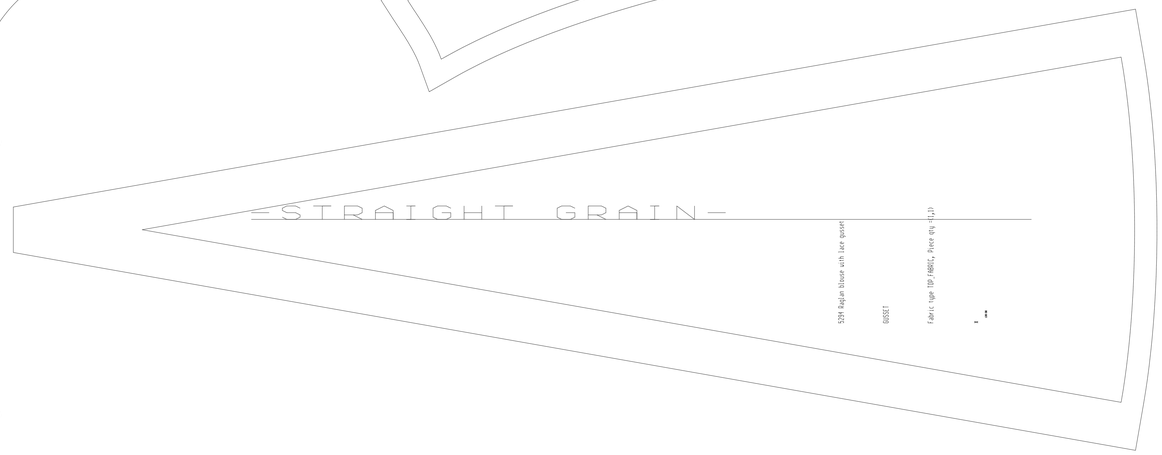
STRAIGHT GRAIN
5294 Raglan blouse with lace gusset
GUSSET
Fabric type TOP_FABRIC, Piece qty =(1,1)

STRAIGHT GRAIN
5294 Raglan blouse with lace gusset
CENTER_FRONT_PART
Fabric type TOP_FABRIC, Piece qty =(1,0)
LEKO CAD