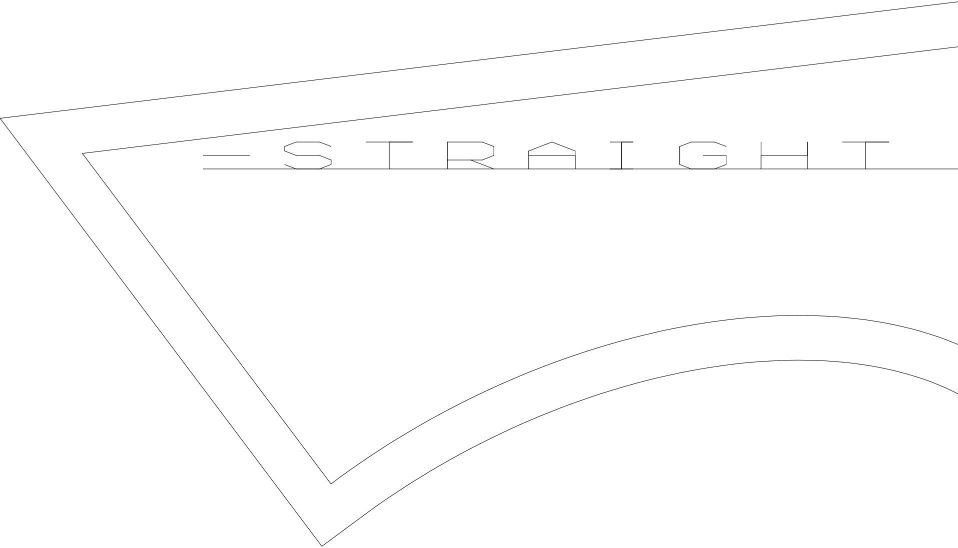

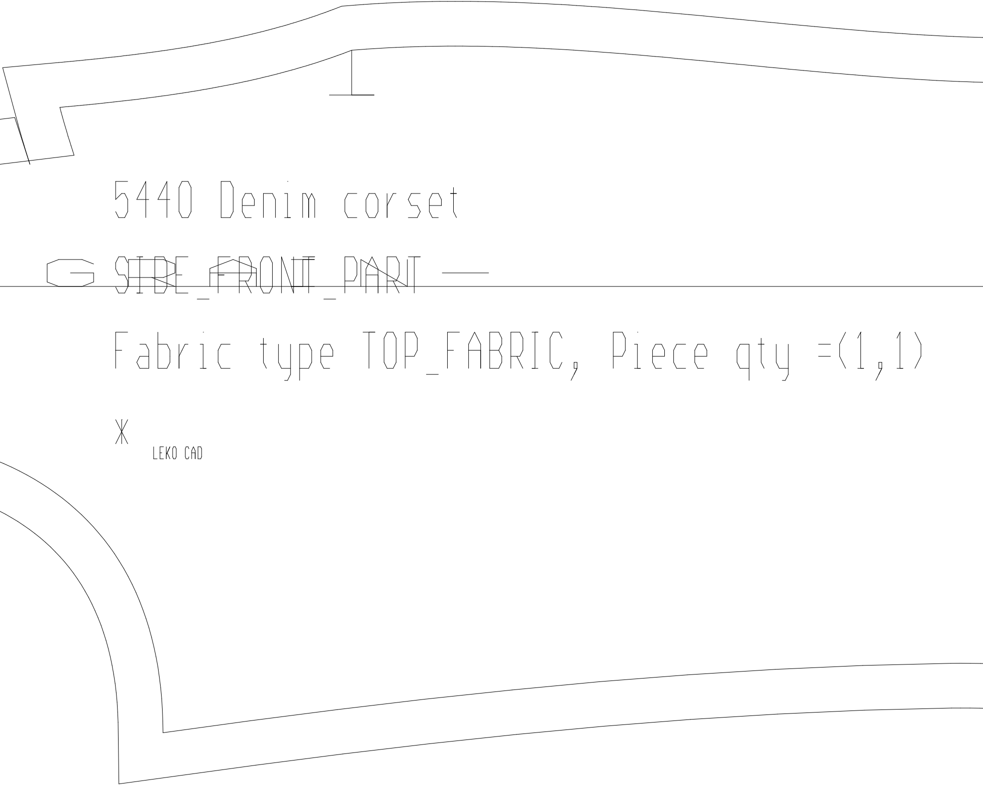

5440 Denim corset

SIDE_FRONT_PART

Fabric type TOP_FABRIC, Piece qty =(1,1)

LEKO CAD

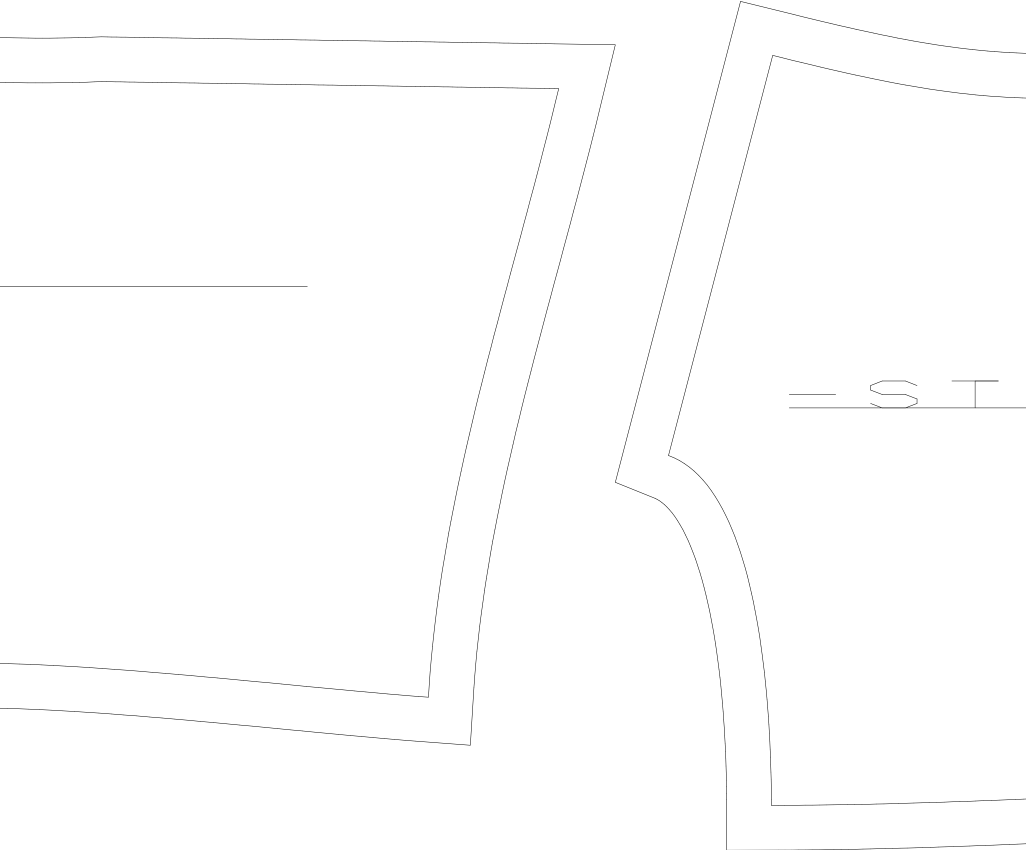

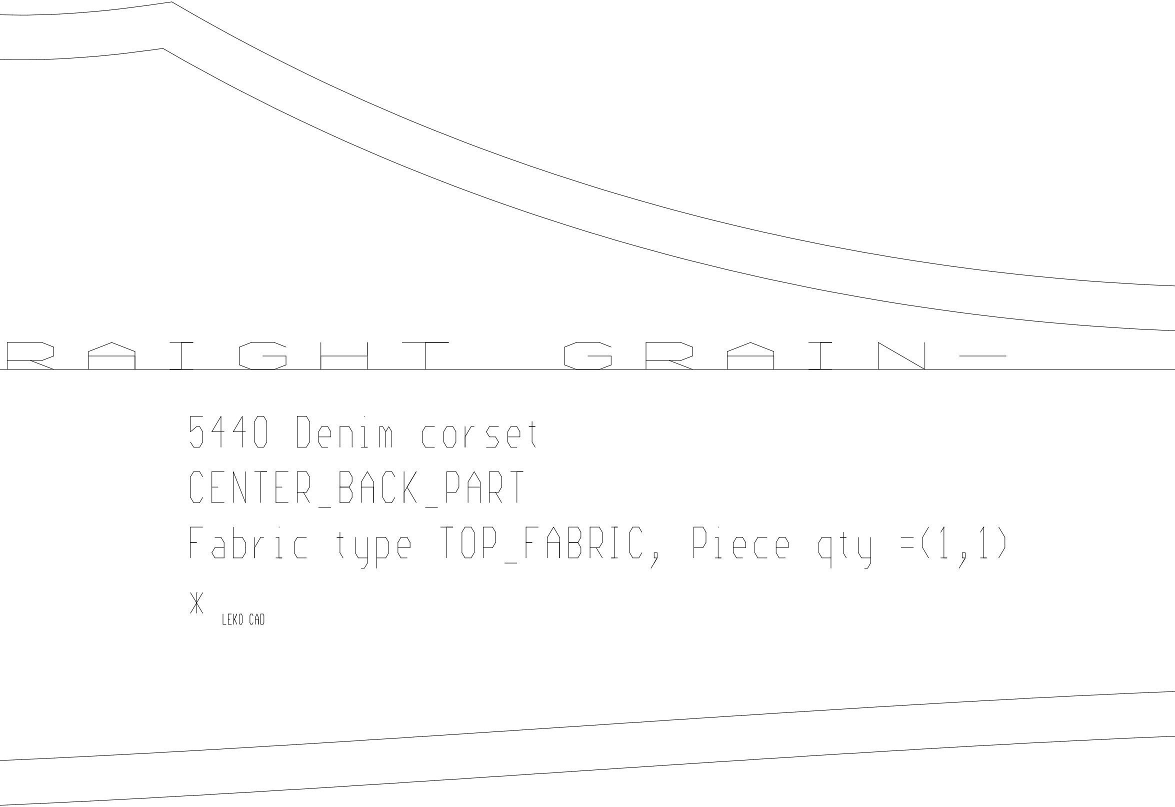
RAIGHT GRAIN

5440 Denim corset

CENTER_BACK_PART

Fabric type TOP_FABRIC, Piece qty =(1,1)

LEKO CAD

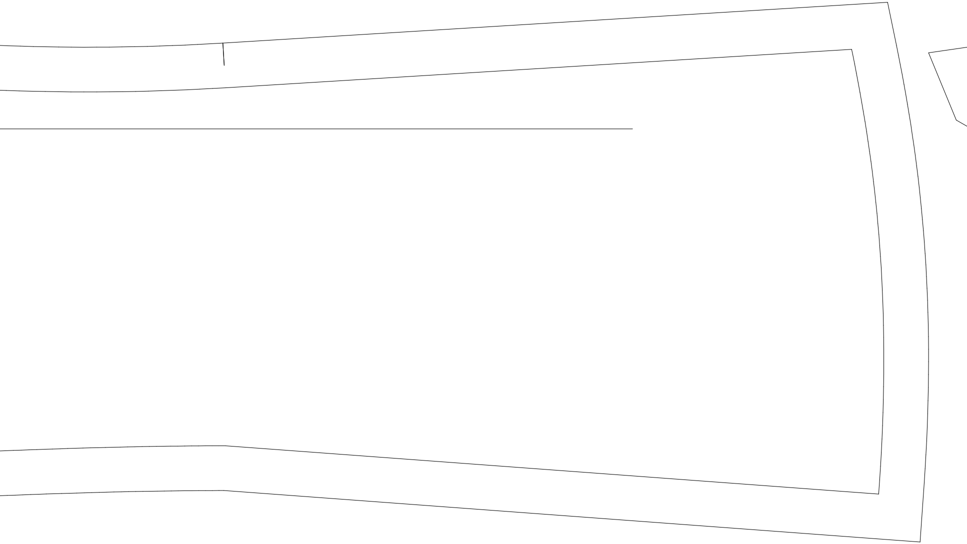

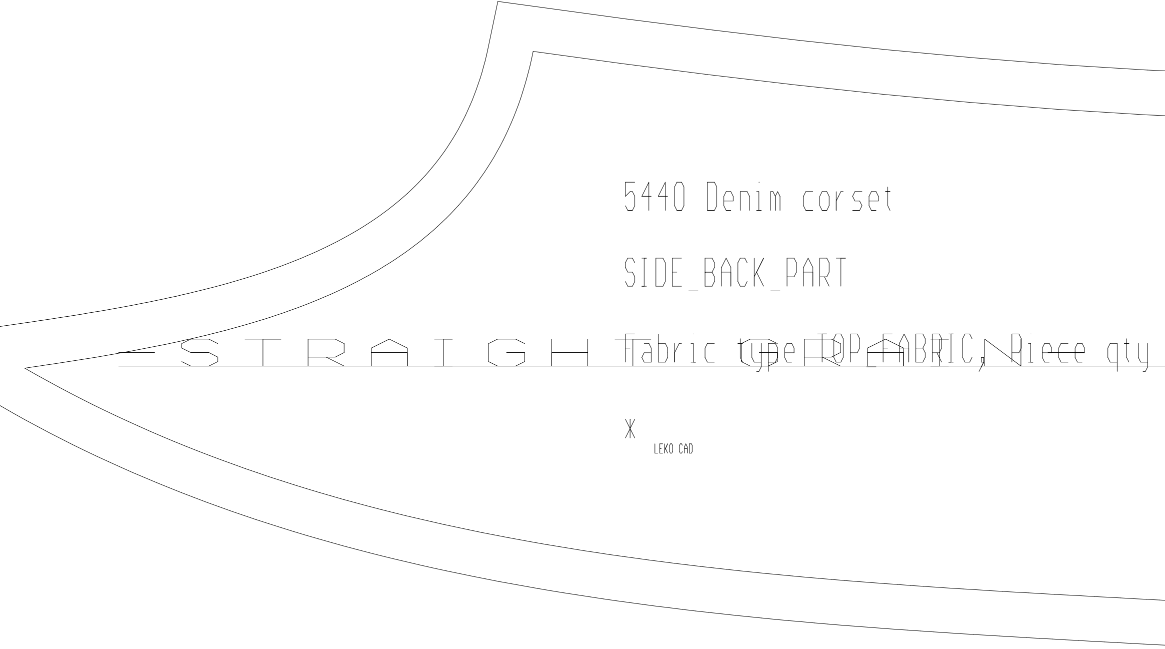
5440 Denim corset
SIDE_BACK_PART
Fabric type TOP FABRIC, Piece qty
STRAIGHT GRAI
LEKO CAD

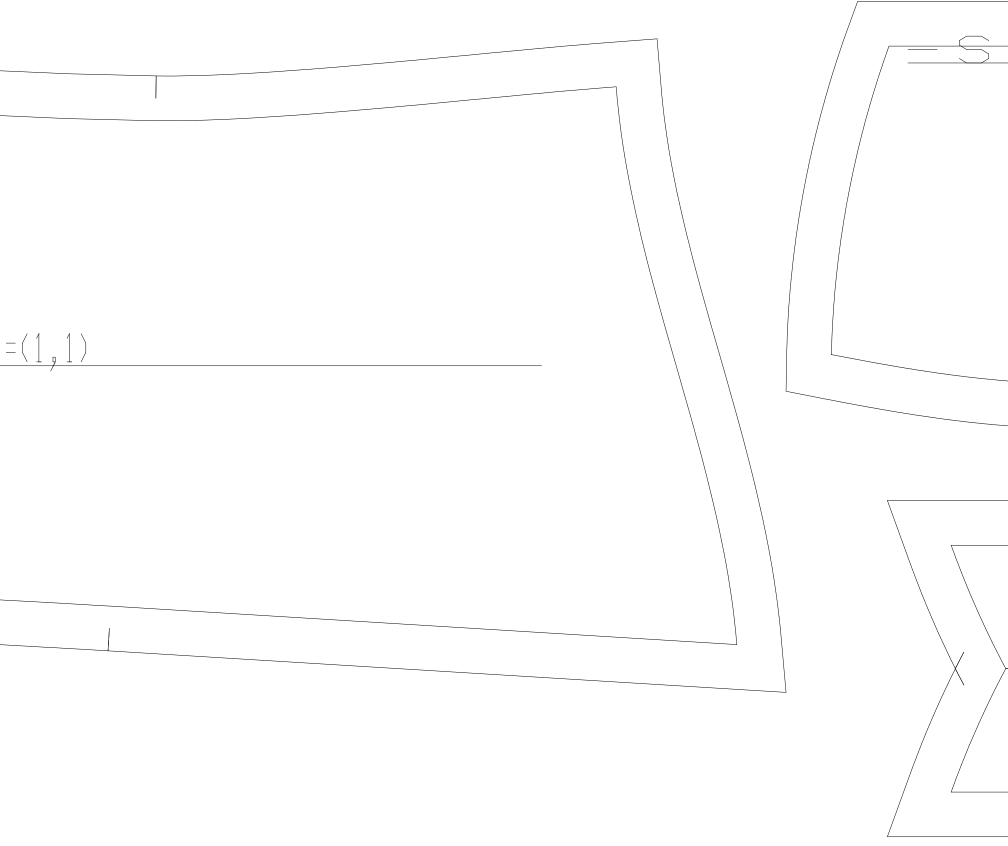

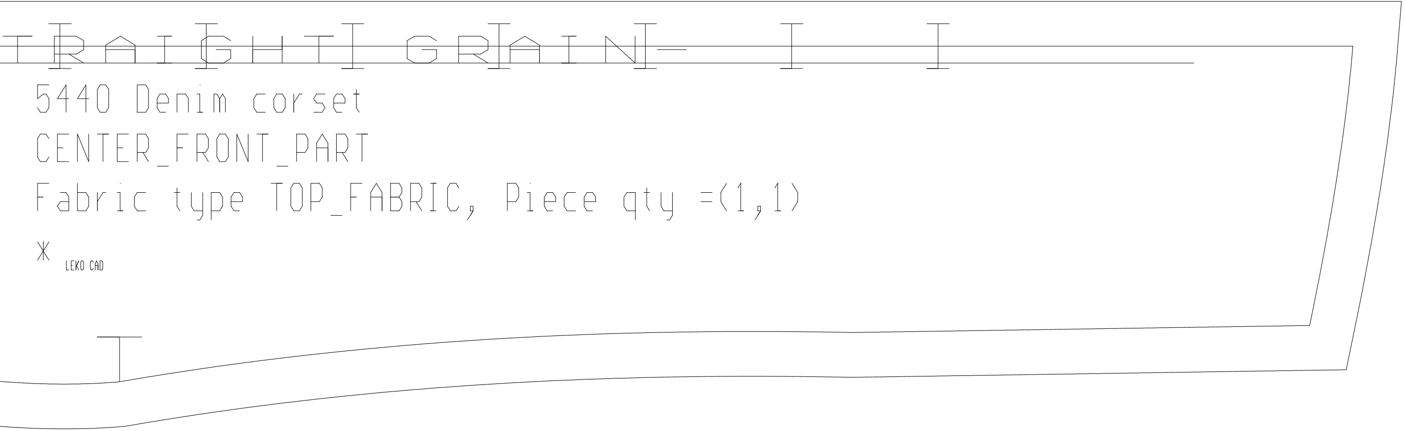
TRAIGHT GRAIN
5440 Denim corset
CENTER_FRONT_PART
Fabric type TOP_FABRIC, Piece qty =(1,1)
LEKO CAD

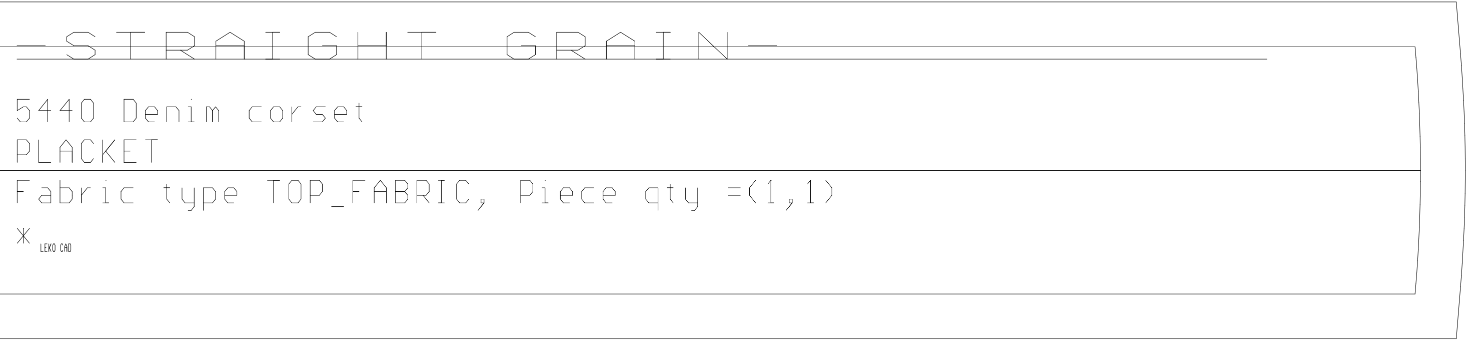
STRAIGHT GRAIN
5440 Denim corset
PLACKET
Fabric type TOP_FABRIC, Piece qty =(1,1)
LEKO CAD