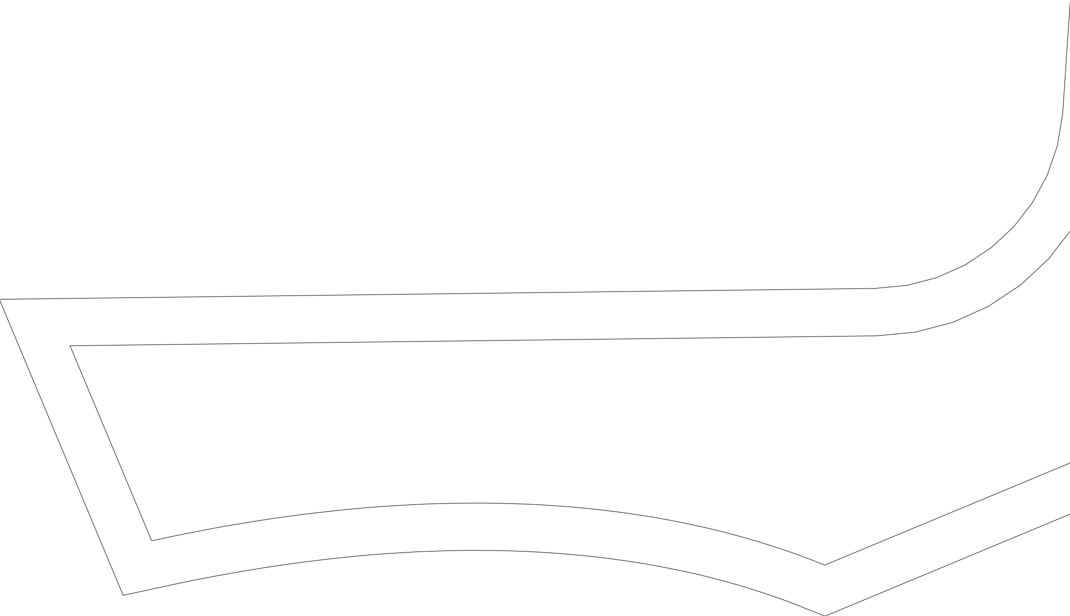

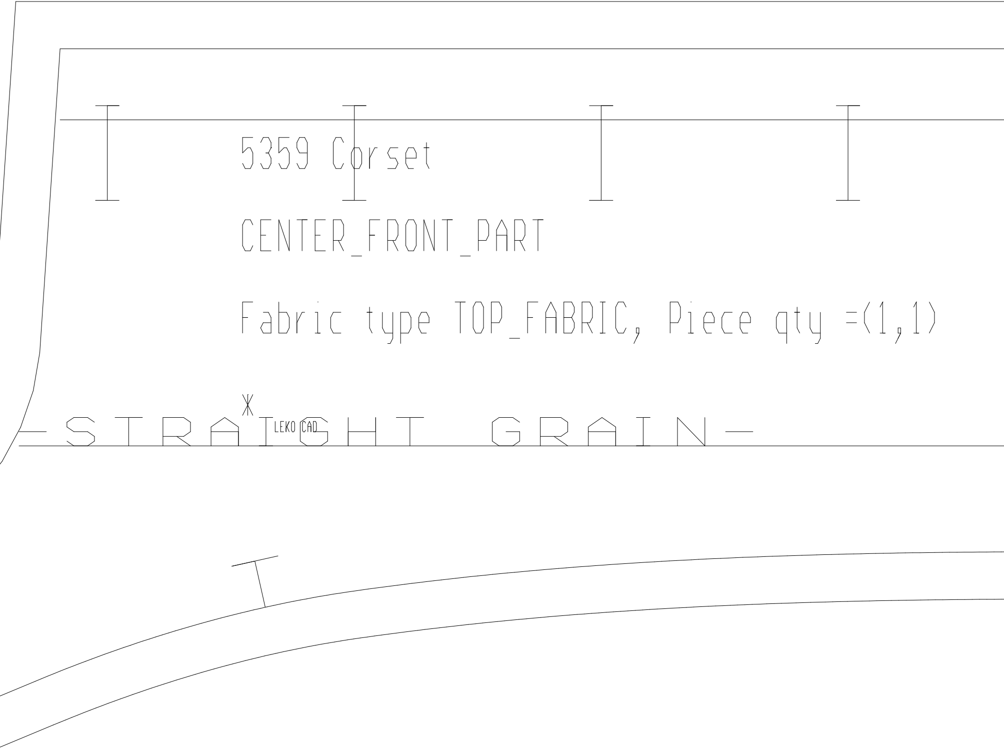
5359 Corset
CENTER_FRONT_PART
Fabric type TOP_FABRIC, Piece qty =(1,1)
STRAIGHT GRAIN
LEKO CAD

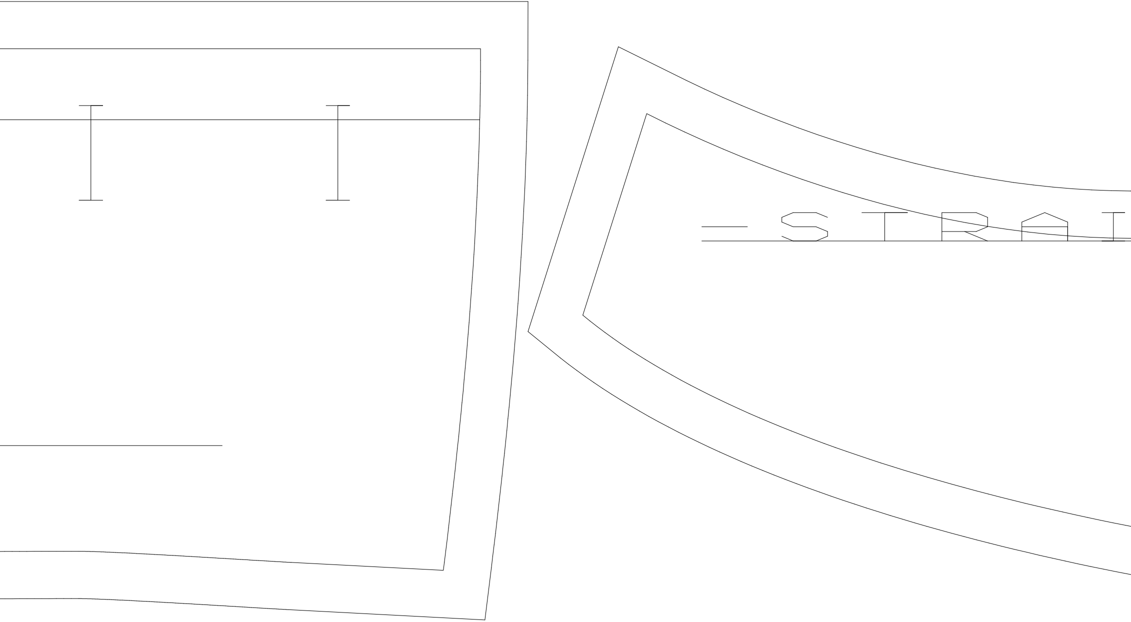

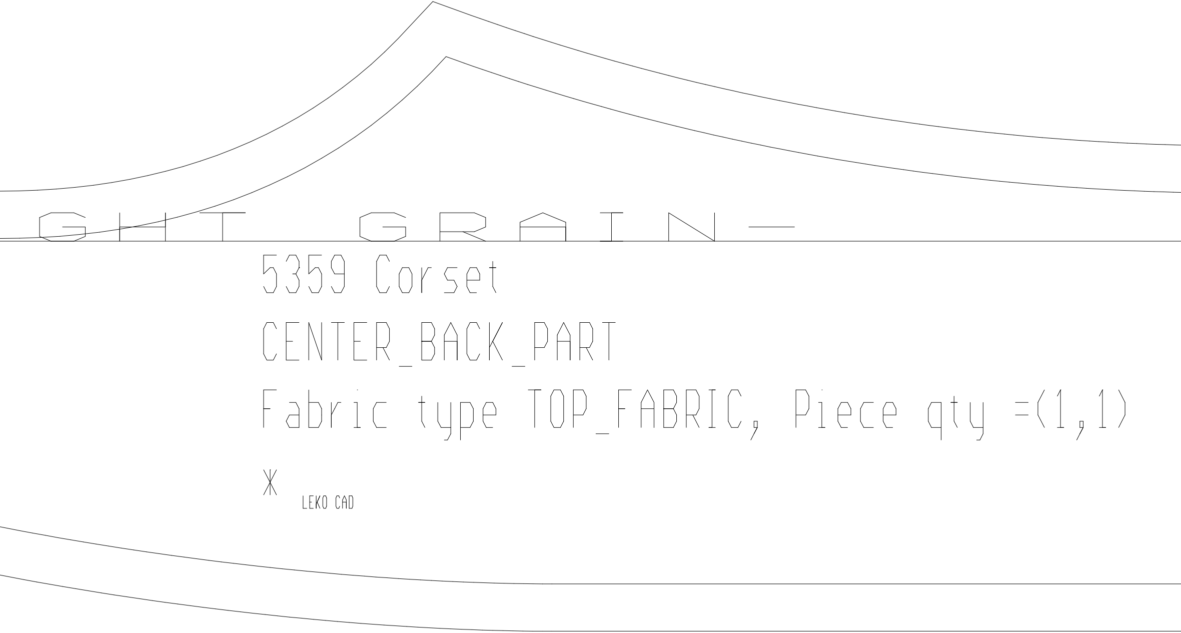
GHT GRAIN—
5359 Corset
CENTER_BACK_PART
Fabric type TOP_FABRIC, Piece qty =(1,1)
LEKO CAD

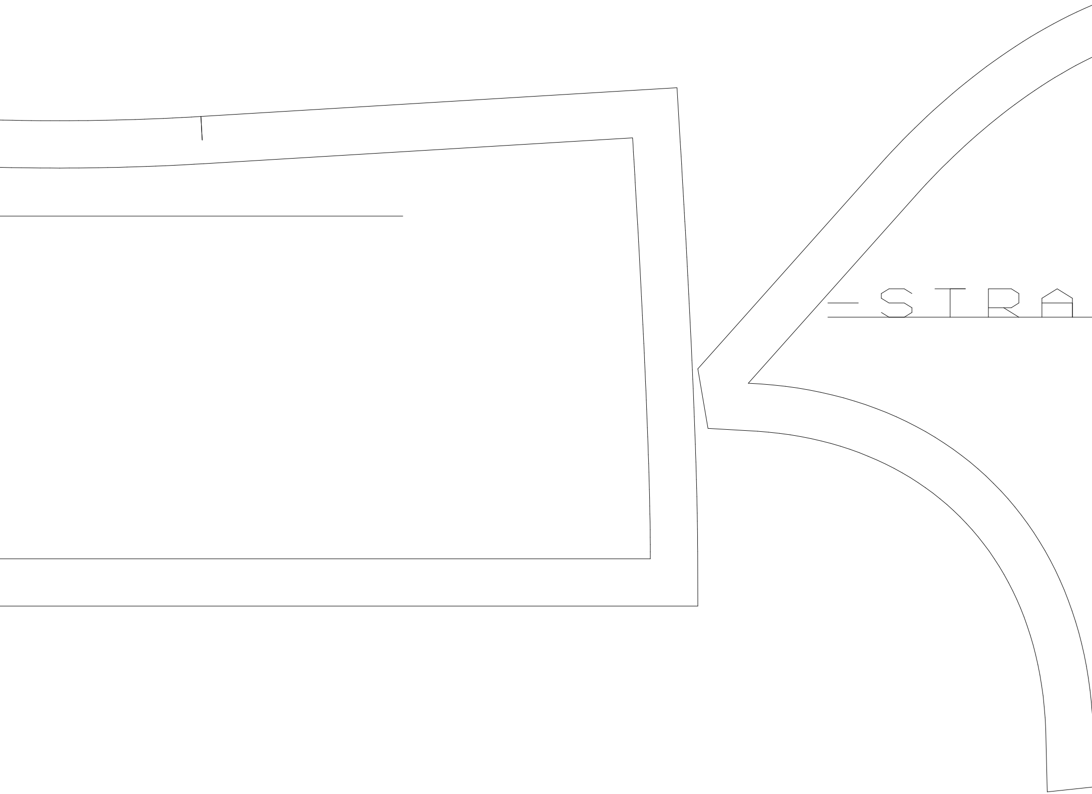

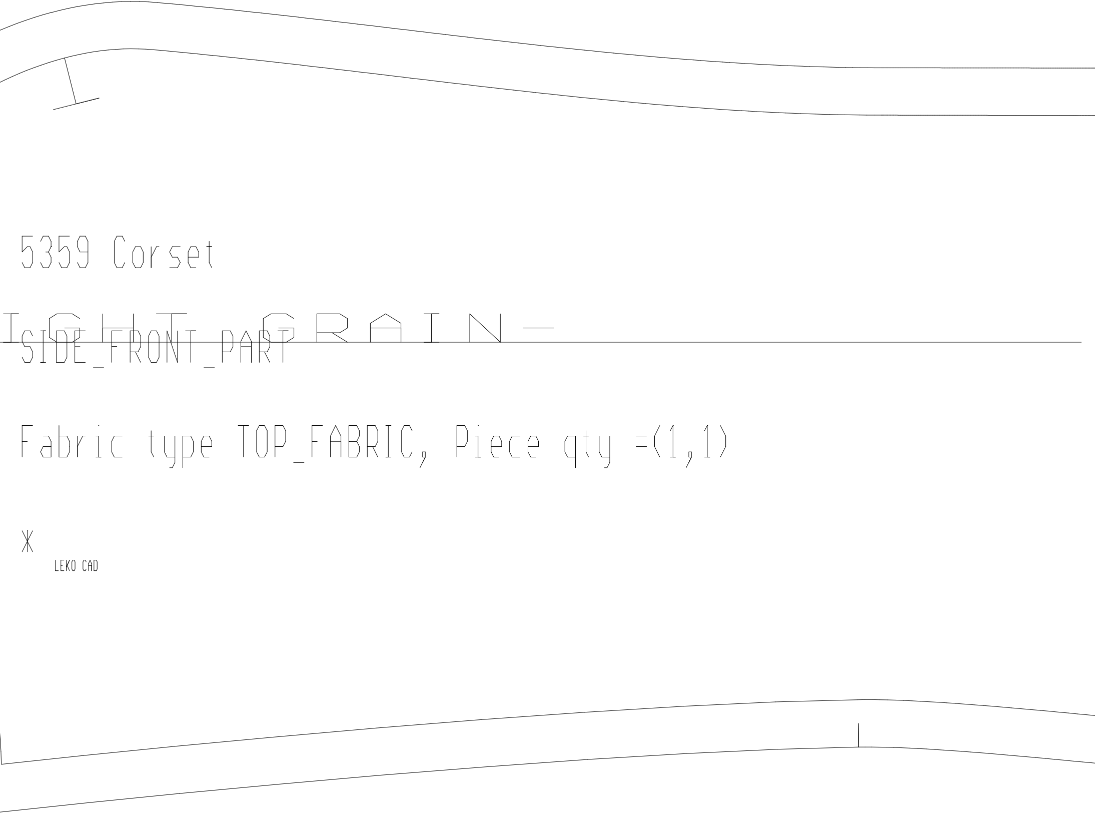
5359 Corset
IGHT GRAIN-
SIDE_FRONT_PART
Fabric type TOP_FABRIC, Piece qty =(1,1)
LEKO CAD

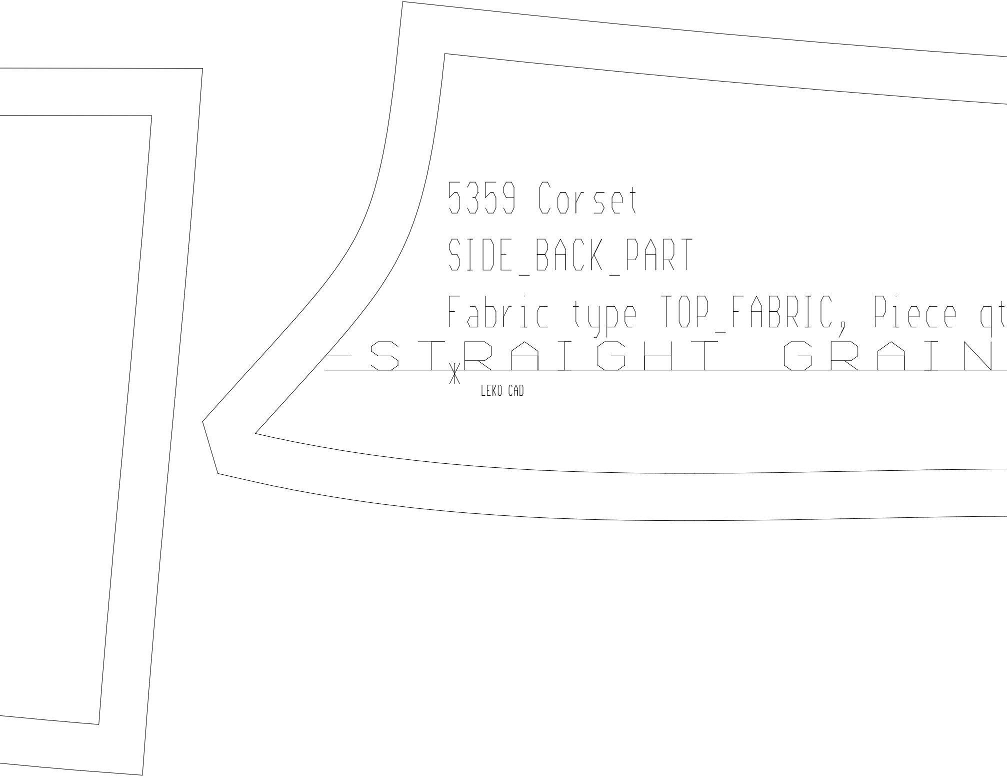
5359 Corset
SIDE_BACK_PART
Fabric type TOP_FABRIC, Piece qt
STRAIGHT GRAIN
LEKO CAD

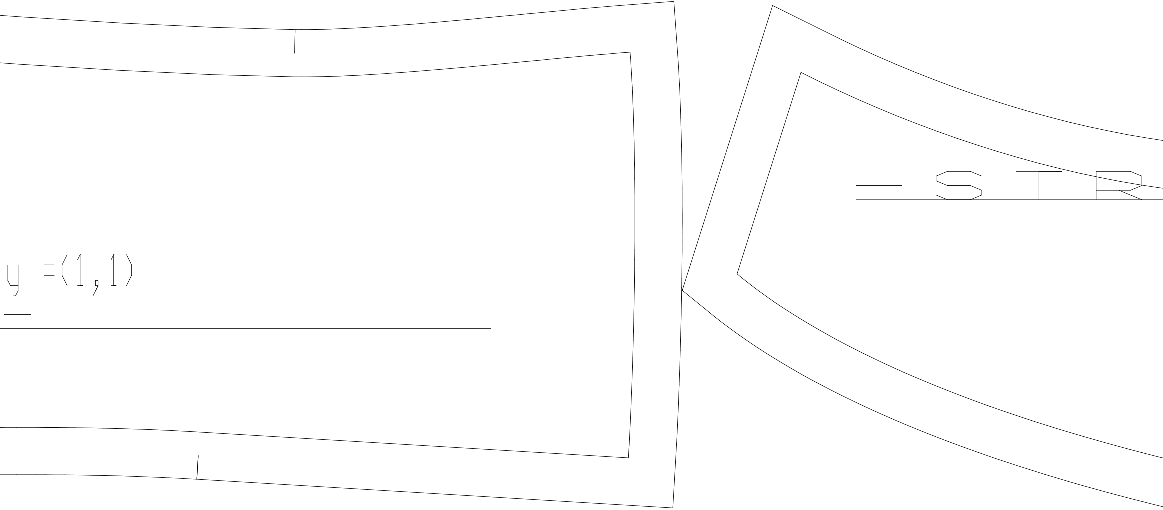

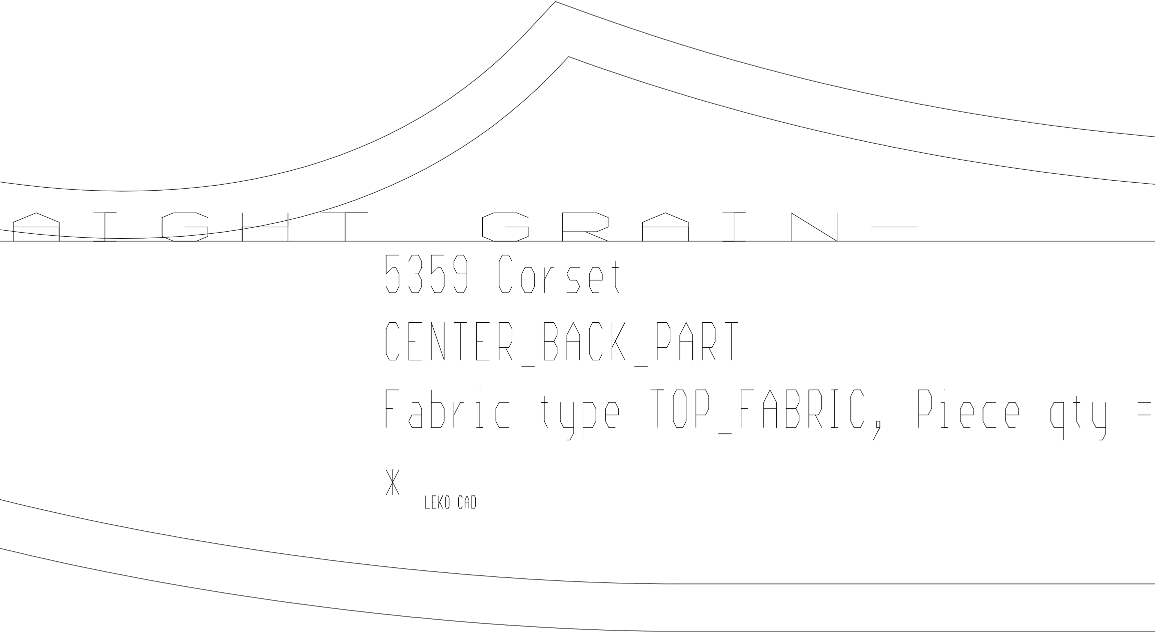

AIGHT GRAIN—

5359 Corset

CENTER_BACK_PART

Fabric type TOP_FABRIC, Piece qty =

LEKO CAD